Design and Development of an Eye-Blink and Speed-Based Intelligent Driving Safety Monitoring System

Puja Das[1],*

[1] Department of Electrical and Electronic Engineering, Southeast University, Dhaka, Bangladesh | ORCID: 0009-0009-9697-9957
Corresponding author email: puja.das@seu.edu.bd

Abstract — Assistive technology for safe driving leverages intelligent systems to enhance road safety by monitoring driver behavior in real time. This study reveals technology integrating an overspeed identification and an eye blink sensor to identify signs of drowsiness. Powered by components like the Arduino Nano, motor drivers, and LCD displays, the system provides immediate alerts through audible warnings and visual feedback when unsafe driving conditions are detected. By promoting driver awareness and proactive safety measures, this technology reduces the risk of accidents and encourages safer driving habits. It is particularly valuable in addressing common causes of road incidents, such as fatigue and drowsiness. Assistive driving technology represents a significant advancement in vehicle safety, contributing to a secure road environment and protecting lives.

Keywords —Arduino nano, Drowsiness, Overspeed, LCD monitor, Sensor.

I. INTRODUCTION

Human cognitive behaviors can affect car driving performance, such as perception (eyes, skin, muscle), knowledge (training, experience), and decision-making capacity. Many car accidents are caused by driver omissions and factors such as workload and fatigue, which can lead to significant driver failures. It is estimated that 70% of road accidents are a consequence of driver inattention [1]. Previous investigations mentioned haptic feedback highlighting human-vehicle interaction, whereas De Groot et al. proposed a seat-vibration-based strategy to alert drivers whenever they cross the safety speed of the vehicle. However, adversity such as driver inattention and vibrations related to unsmooth roads reduced the effectiveness of these methods [2-3].

The haptic feedback was kept on improving by introducing more convenient work techniques such as steering control, based on lane deviation which enriched the driving safety to a great extent [4]. Additionally, it has been demonstrated that workload-adaptive haptic shared control reduced driver workload while enhancing control efficiency and driving performance. In contrast to traditional assistance systems, intention-based haptic guiding minimizes conflicts between automated aid and human inputs by taking the driver's steering intentions into account [5]. However, it was necessary to involve the drivers, along with machine-based control, in the safety issues. In 2021, Nguyen et al. manifested the importance of drivers' contribution to this safety matter [6] whereas the shared control process of the human-machine interactions was investigated in [7] highlighting huge improvement in the driving safety where the impact of tactile and visual guidance on steering performance was emphasized. Data-driven methods for simulating driver steering behavior in haptic aid systems have been extensively explored in recent studies. Despite extensive research, integrating humanization and machine modeling remains a challenge due to the dynamic nature of vehicles in different areas and human interactions.

In this work, vehicle speed detection and human eye blink detection have been merged to ensure a human-machine summative response for safe driving. The remainder of the paper is organized as follows. Section II reviews related work. Section III describes the proposed methodology. Section IV presents experimental results, and Section V concludes with the future scope of this work.

II. RELATED WORK

Among human limitations, driver fatigue is one of the major reasons accidents occur. In order to depict drivers' dependence on shared control, Wang et al. [8] created a weighted driver behavior model that included haptic and visual assistance. A fatigue-aware human-machine shared-control technique that adaptively allocates control authority based on driver fatigue characteristics was recently proposed by Fang et al. [9]. Despite these advancements, current methods mostly focus on driver tiredness adaptation and steering assistance, giving very little thought to various real-time driver and vehicle safety signs within a single framework. Specifically, in the context of integrated driver assistance, the combined use of eye-blinking patterns for fatigue monitoring and vehicle speed readings for overspeed detection has not been thoroughly investigated.

In this study, an extensive method of ensuring safety for driving has been proposed where the vehicle's overspeed and driver's drowsiness are rigorously detected and warned. The methodology section describes the architecture, including components' functionalities, block diagram, and circuit diagram of the system. The result section provides the readings of the sensors used in the safety model and the conclusion section shows the summary of this work with future prospects of this study.

III. METHODOLOGY

The design architecture and hardware components will be described in this section.

A. Block Diagram

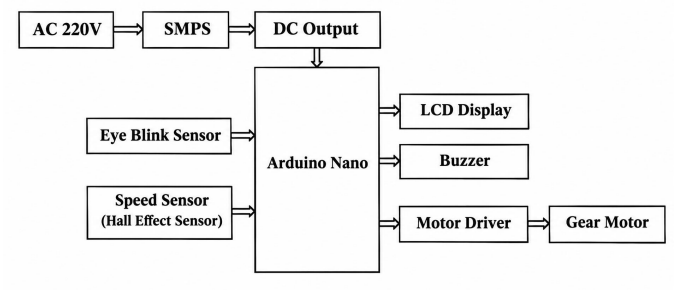

Fig 1. Block diagram of the proposed driving safety model

Fig.1 shows the block diagram of the proposed system. A 220 V AC supply has been used as the power source in this project and the AC power has been converted to DC output by a Switch Mode Power Supply (SMPS). The microcontroller Arduino Nano is connected to the speed sensor and eye blink sensor and the DC output is fed into the Arduino Nano. The output components , such as LCD Display, Buzzer, Motor Driver and gear motor, are connected to the output part of the Arduino.

B. Introduction to components

The regulated DC voltage needed to run the microcontroller, sensors, display, and other electronic parts is supplied by the switched-mode power supply (SMPS). It guarantees a steady power supply for the system as a whole. The suggested system's core processing unit is the Arduino Nano. After processing the input data and receiving signals from the speed and eye-blink sensors, it ascertains whether there has been overspeeding or driver fatigue. Additionally, it regulates the motor driver, buzzer, and display based on preprogrammed situations [10]. The speed sensor produces electrical impulses that correlate to the vehicle's rotational speed or movement. The controller analyzes the measured speed to determine whether there is overspeeding. The system initiates an alert mechanism when the observed speed surpasses the predetermined threshold [11]. By detecting variations in reflected infrared light, the QRD1114 infrared sensor can identify eye-blinking behavior. It keeps track of the driver's blinking pattern and detects extended eye closure, which could be a sign of exhaustion or drowsiness. The microcontroller receives the detected signals and processes them further before generating an alert [12]. Real-time vehicle speed and alerts about overspeeding are displayed on the 16x2 LCD display. When prolonged eye closure is detected, the piezoelectric buzzer sounds an alert to inform the driver of possible safety hazards. The DC gear motor is interfaced with the Arduino Nano by the L293D motor driver, which also regulates the motor's operation in response to overspeed detection. In the prototype, the DC gear motor serves as the vehicle's drive mechanism and illustrates how the suggested system may control speed.

C. Circuit Diagram

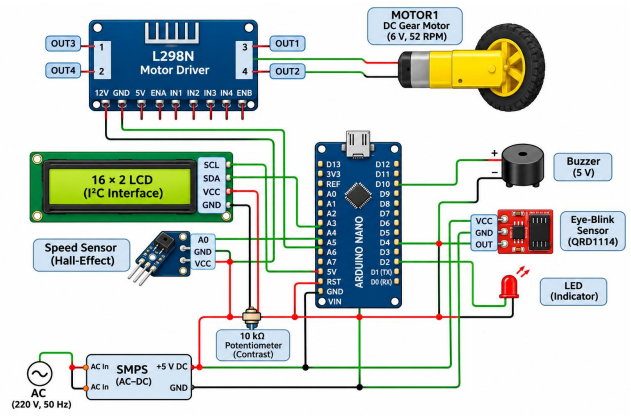

Fig 2. Circuit diagram of the proposed driving safety model

Fig.2 shows the circuit diagram of the proposed system. The suggested driver-safety monitoring system's hardware implementation is shown in the circuit diagram. The Hall-effect speed sensor and QRD1114 eye-blink sensor provide input signals to the Arduino Nano, which serves as the central controller. The controller shows real-time information on the 16x2 I2C LCD and operates the buzzer to offer auditory alerts based on the sensor readings. The DC gear motor is interfaced with an L298N motor driver to show speed-control capabilities while overspeeding. System alerts are visually indicated by an LED when eye blinking is absent for longer time than 2 seconds. The real picture of the experimental set up is depicted in Fig.3.

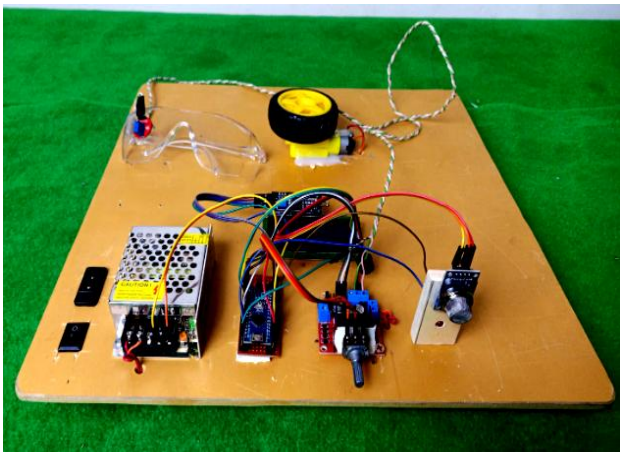

Fig 3. Real picture of the experimental set up of the proposed driving safety model

IV. RESULTS AND DISCUSSION

The readings of the overspeed (Fig.4) and eye blink monitors (Fig.5) are shown in this section. The maximum speed of the DC motor is set 95km/h in the Arduino. When the speed is below 95 km/h, the LCD monitor is simply showing the value of the speed as depicted in Fig. 4 (a). When the speed is greater than the rated value, the LCD monitor is showing overspeed [Fig. 4 (b)].

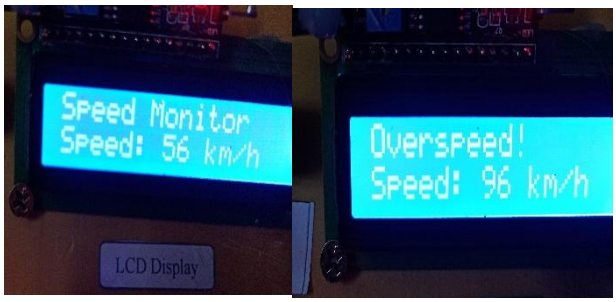

Fig 4. The LCD monitor showing normal speed (a) and overspeed (b)



Fig 5. The buzzer at normal (a) and abnormal eye blinking (b)

The eye blink sensor is programmed to turn off until normal eye blinking [Fig. 5 (a)]. When the eye blink remains absent for two seconds, the buzzer will turn on [Fig. 5 (b)].

V. CONCLUSION AND FUTURE WORK

An important step forward in improving road safety through intelligent technologies is the Assistive Technology for Safe Driving project. This approach efficiently tracks driver behavior in real time by combining an overspeed sensor and an eye blink detector with Arduino Nano, motor drivers, and LCD displays. In order to reduce the likelihood of accidents, it provides prompt visual and auditory alerts to important risk indicators, such as sleepiness and overspeed. Collision warning, automatic braking, TV monitor and IoT will be integrated in this project to improve it's feasibility in future.

VI. DECLARATIONS

A. Funding

This research received no specific grant from any funding agency in the public, commercial, or not-for-profit sectors.

B. Conflict of Interest

The author declare no conflict of interest.

C. Data Availability

The data that support the findings of this study are available from the corresponding author on reasonable request.

D. Ethics Statement

This study did not involve human or animal subjects.

E. Author Contributions

Conceptualization, Methodology, Validation, Investigation, Writing, P.D.

VII. ACKNOWLEDGMENTS

Md. Asif Hossain helped the author with this work.

VIII. REFERENCES

[1] A. Jazayeri, J. R. B. Martinez, H. S. Loeb, and C. C. Yang, "The impact of driver distraction and secondary tasks with and without other co-occurring driving behaviors on the level of road traffic crashes," Accident Analysis & Prevention, vol. 153, Art. 106010, 2021, doi: 10.1016/j.aap.2021.106010..

[2] R. E. Fenton, "An improved man-machine interface for the driver-vehicle system," *IEEE Transactions on Human Factors in Electronics*, vol. 4, pp. 150–157, 1966.

[3] S. de Groot, J. C. F. de Winter, J. M. L. Garcia, M. Mulder, and P. A. Wieringa, "The effect of concurrent bandwidth feedback on learning the lane-keeping task in a driving simulator," *Human Factors*, vol. 53, no. 1, pp. 50–62, 2011. [https://doi.org/10.1177/0018720810393241]

[4] J. Roozendaal, E. Johansson, J. C. F. de Winter, D. Abbink, and S. M. Petermeijer, "Haptic lane-keeping assistance for truck

driving: A test track study," Human Factors, vol. 63, no. 8, pp. 1380–1395, 2021. https://doi.org/10.1177/0018720820928622

[5] Z. Yan, K. Yang, Z. Wang, B. Yang, T. Kaizuka, and K. Nakano, "Intention-based lane changing and lane keeping haptic guidance steering system," IEEE Transactions on Intelligent Vehicles, vol. 6, no. 4, pp. 622–633, 2021. https://doi.org/10.1109/TIV.2020.3044180

[6] A.-T. Nguyen, J. J. Rath, C. Lv, T.-M. Guerra, and J. Lauber, "Human-machine shared driving control for semi-autonomous vehicles using level of cooperativeness," Sensors, vol. 21, no. 14, Art. no. 4647, 2021. https://doi.org/10.3390/s21144647

[7] Z. Wang, R. Zheng, E. J. C. Nacpil, and K. Nakano, "Modeling and analysis of driver behaviour under shared control through weighted visual and haptic guidance," IET Intelligent Transport Systems, vol. 16, no. 5, pp. 648–660, 2022. https://doi.org/10.1049/itr2.12163

[8] Z. Wang, R. Zheng, E. J. C. Nacpil, and K. Nakano, "Modeling and analysis of driver behaviour under shared control through weighted visual and haptic guidance," IET Intelligent Transport Systems, vol. 16, no. 5, pp. 648–660, 2022. DOI: 10.1049/itr2.12163.

[9] Z. Fang, J. Wang, Z. Wang, J. Chen, G. Yin, and H. Zhang, "Human–machine shared control for path following considering driver fatigue characteristics," IEEE Transactions on Intelligent Transportation Systems, vol. 25, no. 7, pp. 7250–7264, 2024. DOI: 10.1109/TITS.2023.3347439.

[10] O. I. Adebisi, I. A. Adejumobi, F. O. Durodola, and H. A. Jim, "Development of a microcontroller based automobile speed limiting device and alarm control system," International Journal of Electrical and Computer Engineering, vol. 13, no. 1, pp. 195–206, Feb. 2023.

[11] O. F. Hassan et al., "Intelligent driver monitoring systems: a survey of drowsiness detection technologies for road safety," Artificial Intelligence Review, vol. 59, Art. no. 137, 2026

[12] M. Martin, M. Negoțaș, and F. B. Martin, "Development of a real-time eye blink monitoring system using an IR sensor and Arduino microcontroller," The Annals of Dunarea de Jos University of Galati, Fascicle IX: Metallurgy and Materials Science, 2025.

© Year The Author(s). Published by the International Journal of Engineering and Techniques (IJET). This is an open-access article distributed under the terms of the Creative Commons Attribution 4.0 International License (CC BY 4.0), which permits unrestricted use, distribution, and reproduction in any medium, provided the original work is properly cited. License: https://creativecommons.org/licenses/by/4.0/